Current part is item (2) on diagram. Available at www.oshkoshequipment.com

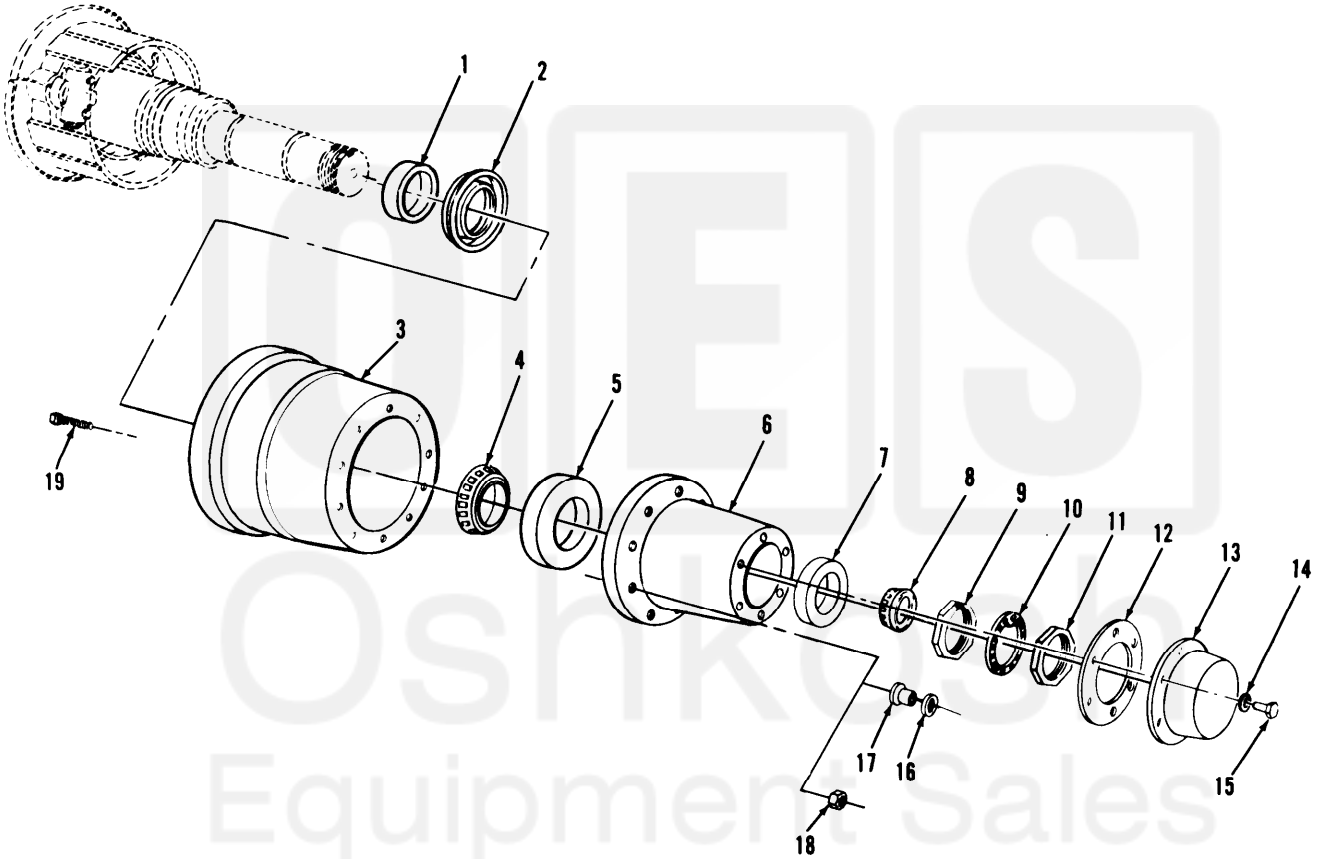

FIGURE 49. HUB AND DRUM INSTALLATION.

Current part is item (2) on diagram. Available at www.oshkoshequipment.com

Current part is item (2) on diagram. Available at www.oshkoshequipment.com

(1) ITEM NO	(2) SMR CODE	(3) CAGEC	(4) PART NUMBER	(5) DESCRIPTION AND USABLE ON CODES (UOC)	(6) QTY
				GROUP 1311 WHEEL ASSEMBLY	
				FIG. 49 HUB AND DRUM INSTALLATION	
1	PAOZZ	78500	1199M2509	WIPER,OIL SEAL LEFT HALF AND RIGHT HALF, AXLES 5, 6, 7 AND 8	8
2	PAOZZ	02397	A1205T774	SEAL,PLAIN,ENCASED HUB AND DRUM	8
3	PAOZZ	78500	3219H3908	DRUM, BRAKE USED ON VEHICLE SERIAL NUMBER 201 AND SUBSEQUENT	8
3	PAOZZ	78500	3219M3237X	BRAKE DRUM LEFT HALF AND RIGHT HALF AXLES 5, 6, 7 AND 8, USED ON VEHICLE SERIAL NUMBER 1 THROUGH 200	8
4	PAOZZ	60086	786	BEARING, TAPERED HUB AND DRUM	8
5	PAOZZ	00447	620631	CUP, TAPERED ROLLER LEFT HALF AND RIGHT HALF AXLES 5, 6, 7, AND 8	8
6	PAOZZ	78500	333K1805X	HUB,BODY TRAILER AXLES 5,6,7 & 8, USED ON VEHICLE SERIAL NUMBER1 THROUGH 200	8
6	PBOZZ	78500	A333M2275	HUB BODY USED ON VEHICLE SERIAL NUMBER 201 AND SUBSEQUENT	8
7	PAOZZ	78500	HM617010	CAP, BEARING, OUTER	8
8	PAOZZ	09136	HM617049	CONE AND ROLLERS, LEFT HALF AND RIGHT HALF AXLES 5, 6, 7 AND 8	8
9	PAOZZ	19207	7979309-1	NUT,PLAIN,OCTAGON HUB AND DRUM	8
10	POAZZ	19207	5139123	WASHER,LOCK AXLE NUT	8
11	PAOZZ	19207	7346885	NUT,PLAIN,OCTAGON LEFT HALF AND RIGHT HALF AXLES 5, 6, 7 AND 8	8
12	PAOZZ	78500	2208S773	GASKET PART OF KIT P/N 5704977	8
13	PAOZZ	19207	8710725	CAP, HUB TRAILER AXLES 5, 6, 7 AND 8	8
14	PAOZZ	96906	MS35338-45	WASHER, LOCK	48
15	PAOZZ	78500	S255C	SCREW,CAP LEFT HALF AND RIGHT HALF AXLES 5, 6, 7 AND 8	48
16	PAOZZ	78500	1199M117	NUT, SINGLE BALL HEX, LEFT AND THREAD, USED ON SERIAL NUMBER 1 THROUGH 200	40
16	PAOZZ	78500	1199N118	NUT, SINGLE BALL SEAT, HEX, RIGHT HAND THREAD, USED ON SERIAL NUMBER 1 THROUGH 200	40
17	PAOZZ	78500	1199J114	NUT CAP ASSEMBLY LEFT HAND DUAL WHEEL MOUNTING, RIGHT HAND THREAD, USEDON VEHICLE SERIAL NUMBER 1 THROUGH 200	40
17	PAOZZ	78500	1199K115	NUT, CAP, HEX LEFT HAND THREAD, USED ON VEHICLE SERIAL NUMBER 1 THROUGH 200	40
18	PAOZZ	19207	12274570	NUT,SELF-LOCKING, CO LOCKING,HUB AND DRUM,USED ON VEHICLE SERIAL NUMBER 201AND SUBSEQUENT PART OF KIT P/N 5704977	80
19	PAOZZ	19207	8763020-1	BOLT,RIBBED SHOULDE HUB AN DRUM ASSEMBLY,USED ON VEHICLE SERIAL	80

Current part is item (2) on diagram. Available at www.oshkoshequipment.com